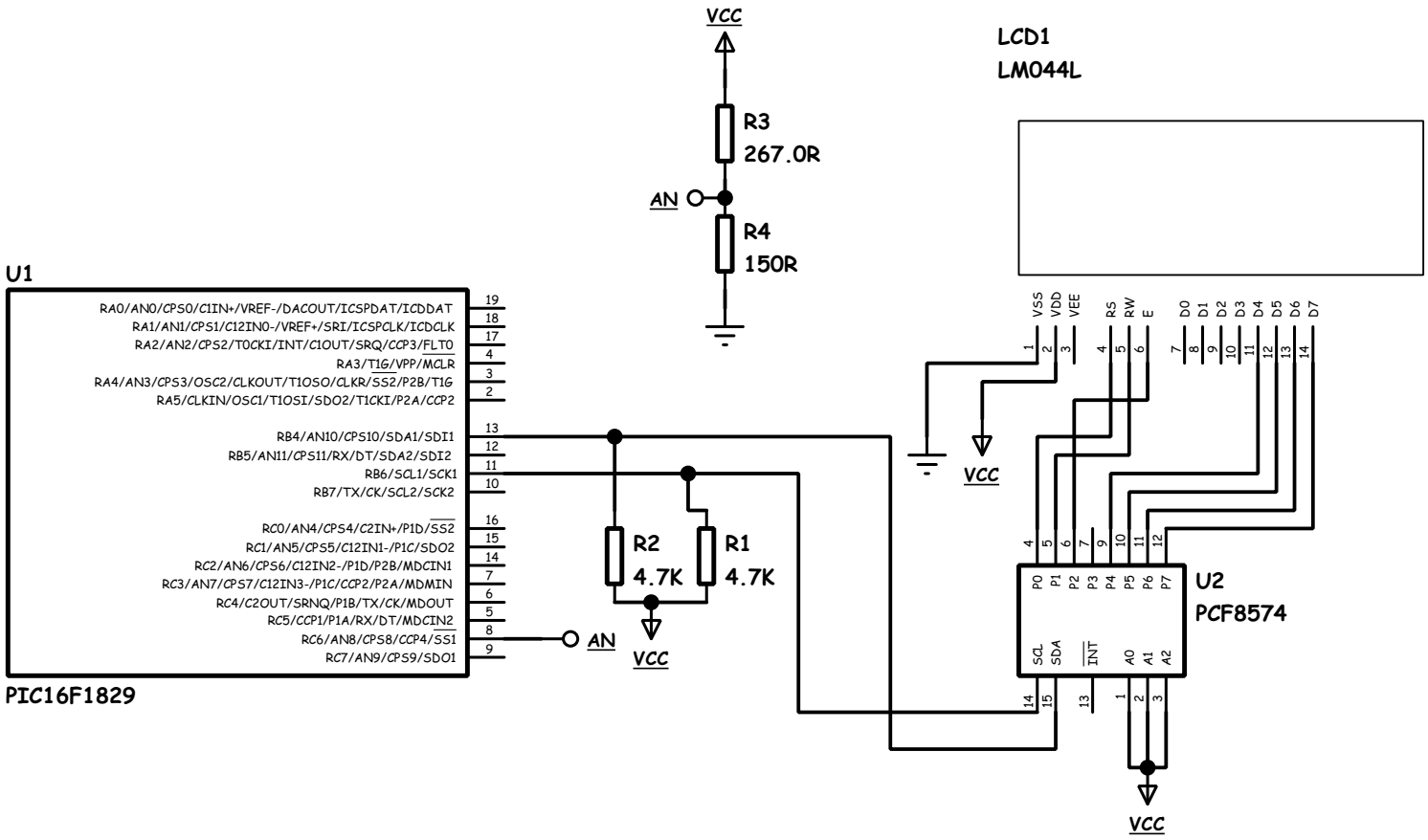
VCC
R3
267.0R
AN
R4
150R
LCD1
LM044L
U1
RA0/AN0/CPS0/C1IN+/VREF-/DACOUT/ICSPDAT/ICDDAT
RA1/AN1/CPS1/C12IN0-/VREF+/SRI/ICSPCLK/ICDCLK
RA2/AN2/CPS2/T0CKI/INT/C1OUT/SRQ/CCP3/FLT0
RA3/T1G/VPP/MCLR
RA4/AN3/CPS3/OSC2/CLKOUT/T1OSO/CLKR/SS2/P2B/T1G
RA5/CLKIN/OSC1/T1OSI/SDO2/T1CKI/P2A/CCP2
RB4/AN10/CPS10/SDA1/SDI1
RB5/AN11/CPS11/RX/DT/SDA2/SDI2
RB6/SCL1/SCK1
RB7/TX/CK/SCL2/SCK2
RC0/AN4/CPS4/C2IN+/P1D/SS2
RC1/AN5/CPS5/C12IN1-/P1C/SDO2
RC2/AN6/CPS6/C12IN2-/P1D/P2B/MDCIN1
RC3/AN7/CPS7/C12IN3-/P1C/CCP2/P2A/MDMIN
RC4/C2OUT/SRNQ/P1B/TX/CK/MDOUT
RC5/CCP1/P1A/RX/DT/MDCIN2
RC6/AN8/CPS8/CCP4/SS1
RC7/AN9/CPS9/SDO1
PIC16F1829
R2
4.7K
R1
4.7K
AN
VCC
VSS
VDD
VEE
RS
RW
E
D0
D1
D2
D3
D4
D5
D6
D7
VCC
U2
PCF8574
P0
P1
P2
P3
P4
P5
P6
P7
SCL
SDA
INT
A0
A1
A2
VCC